ANNOVI REVERBERI®
The Power of Experience

POMPA A PISTONI
JK GREEN OIL
PLUNGER PUMP

228 Series

POMPA ALBERO MASCHIO
Solid shaft pump

idropulitrici *pressure washers* | **processi industriali** *industrial processes* | **autolavaggio** *car wash* | **agricoltura** *agriculture* | **municipality**

cantieri ed edilizia *construction industry*

Premium Series
LOW MAINTENANCE
HIGH EFFICIENCY

CAR WASH

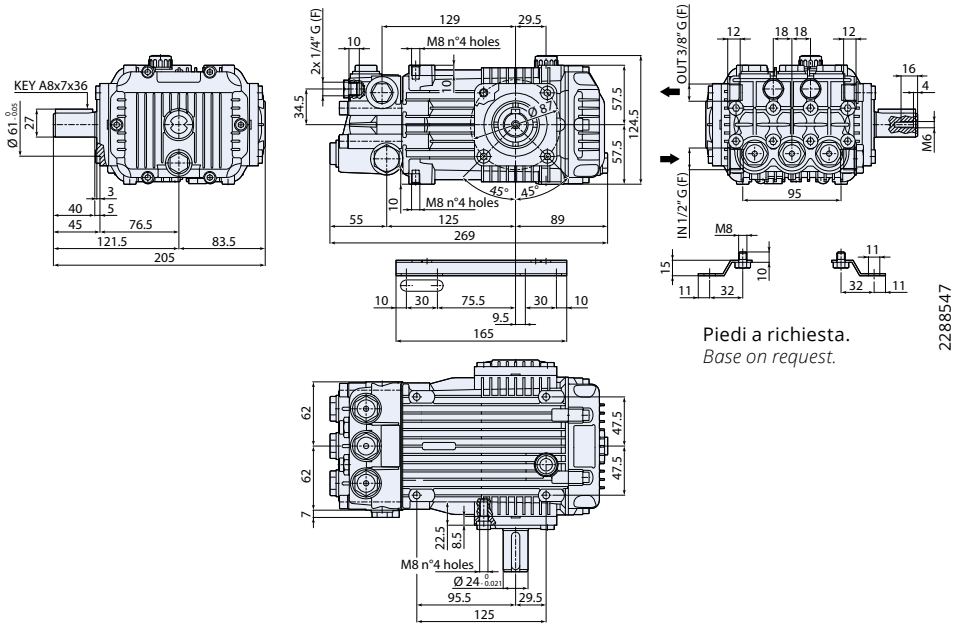

Piedi a richiesta.
Base on request.

N version

MOD	MAX l/min	MAX gpm	MAX bar	MAX psi	hp	kW	N° giri/1'	NET kg
JK 1450 rpm N version Ø 24 mm								
JK GREEN OIL	15	3,96	200	2900	7,5	5,5	1450	10

testa nichelata *nickel plated brass head*

bielle in bronzo *bronze connecting-rods*

97215 - LF - 900000372